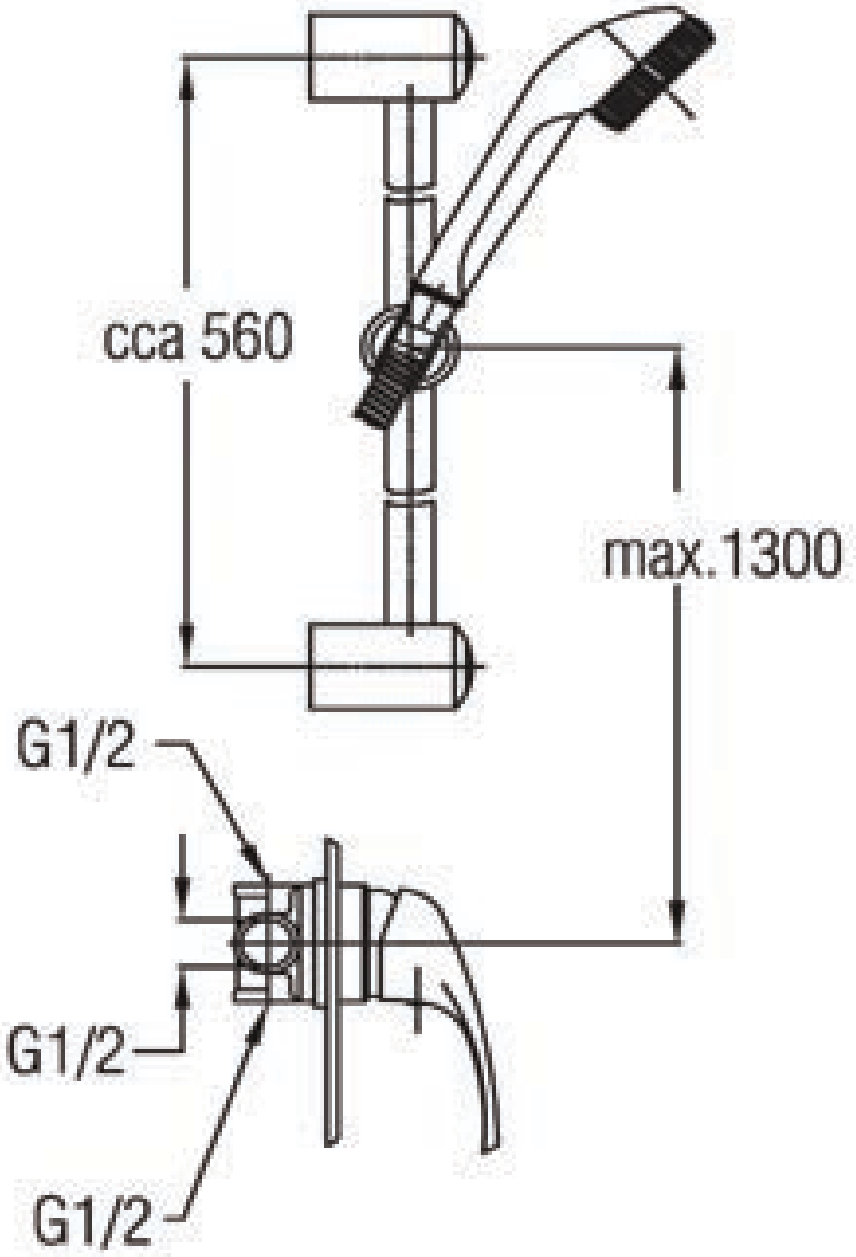
cca 560
max.1300
G1/2
G1/2
G1/2

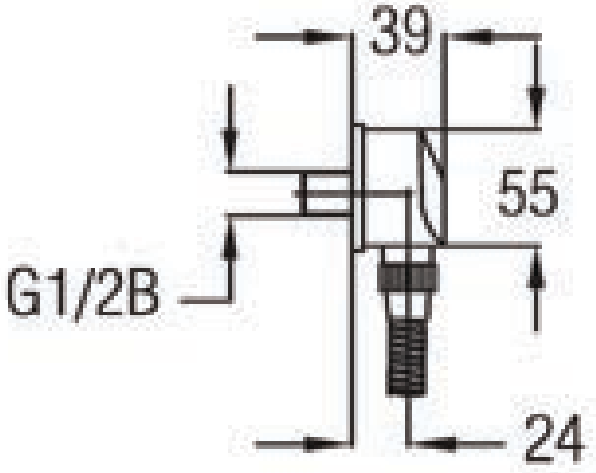
39
55
G1/2B
24